HEAT TREATMENT AND FINAL FINISH

PHYSICAL PROPERTIES	
Y. P.	
T. S.	
EL. 2	
RED	
BR.	
ROCK	
SCL	

SEPTEMBER 17, 1943

REVISIONS

1	11-15-43		
2	12-17-43		
3	1-13-44		
4	3-21-44		
5	9-11-45		

DRG. PERTAINS TO

51-84	30BMG-M1919M1E1
51-125	30BMG-M1919A6

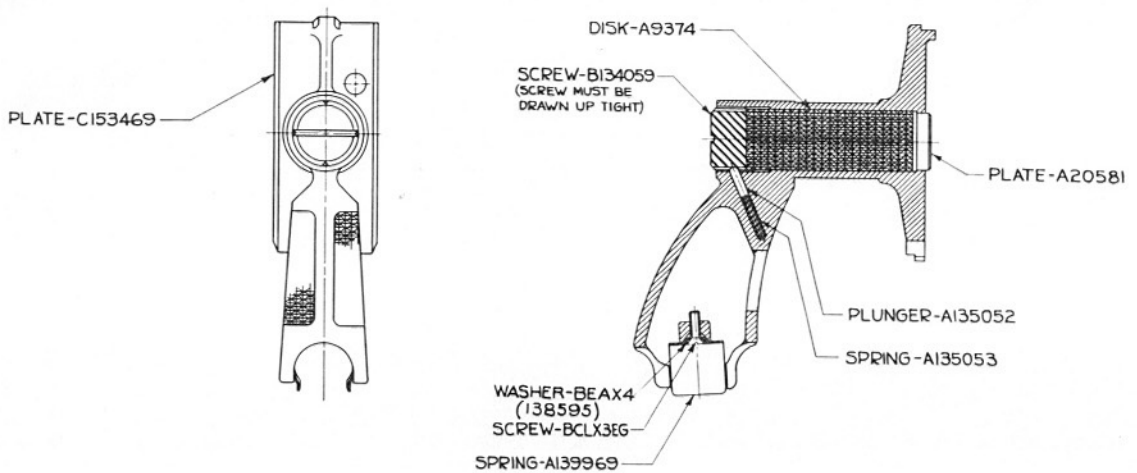

PLATE, BACK W/BUFFER, ASSEMBLY (7100059)

0 1 2 3 4 5 6 7 8 9 10 11 INCHES

TOLERANCE ON DIMENSIONS NOT OTHERWISE SPECIFIED
DECIMAL ± —
FRACTIONAL ± —
ANGULAR ± —

SUBMITTED:

APPROVED BY ORDER OF THE CHIEF OF ORDNANCE

CAPT, ORD DEPT, U. S. A.

ORDNANCE DEPT., U. S. A.

MADE AT ROCK ISLAND ARSENAL

C 7100059

A139969

HEAT TREATMENT & FINAL FINISH

HEAT TREAT

FINISH TYPE II CLASS B

11'	9-17-43	14⁴	9-11-45
12'	1-13-44		
13'	3-21-44		

PHYSICAL PROPERTIES	
Y. P.	
T. S.	
EL-2	
RED.	
HT. T.	
BR.	
SCL.	
C. C.	
ROCK.	A 73-76

JUNE 26, 1936

REVISIONS

1'	9-30-36	6'	10-28-41
2²	3-11-37	7'	12-15-41
3²	2-19-40	8²	3-25-42
4'	2-17-41	9²	6-18-42
5²	6-2-41	10'	7-7-42

DRG. PERTAINS TO

C7100059	PLATE, BACK,
	W/BUFFER, ASS'Y.
51-84	.30BMG-M1919A4(FLEX.)
51-125	.30 BMG-M1919A6

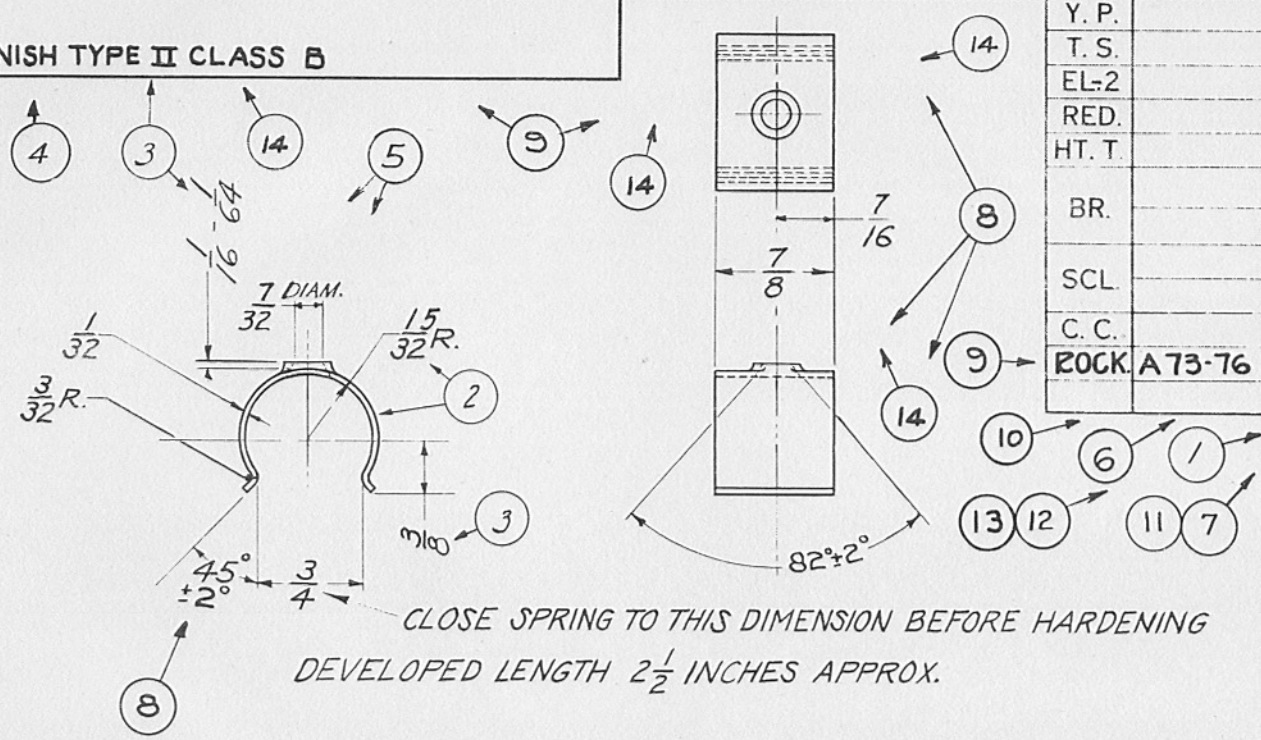

CLOSE SPRING TO THIS DIMENSION BEFORE HARDENING

DEVELOPED LENGTH $2\frac{1}{2}$ INCHES APPROX.

SPRING, STOCK

SPRING STEEL WD 1095

A139969-5

2 5

TOLERANCE ±.01 ALLOWED ON ALL DIMENSIONS UNLESS OTHERWISE SPECIFIED.

SCALE 1/1

A139969

SYMBOL

TAS 294

DFTSMAN	TRACER	LDG DFTSMAN
E. J. L.	W. G. G.	A. J. C.
CHECKER		CHIEF DFTSMAN
C. E. F.		

SUBMITTED

CAPT. ORD DEPT. U.S.A.

APPROVED BY ORDER OF THE CHIEF OF ORDNANCE:-

S. P. Spalding

LT. COL. ORD DEPT. U.S.A.

ORDNANCE DEPT. U.S.A.

SCREW, MACHINE, STEEL
FLAT HEAD, NF-3

BCLX3

ORDNANCE DEPARTMENT STANDARD (ORDNANCE DESIGN)

HBH APPROVED 5-15-31 DATE

SUPERSEDES BCLX3 WITHOUT CHANGE 6-2-45

*TOLERANCES ON LENGTH (L) = -3 PER CENT BUT NOT LESS THAN -.025 INCH.

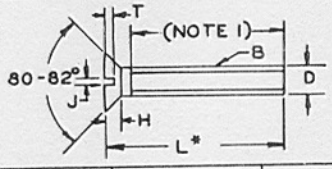

THE UNTHREADED BODY DIAMETER SHALL HAVE THE SAME TOLERANCES AS THE PITCH DIAMETER OF THE THREADS SHOWN IN THE AMER. NAT. STD. FOR SCREW THREADS WHERE THE NUMBER OF THREADS PER INCH ARE THE SAME.

		#0	#1	#2	#5	#8	#10
D Diameter of Screw	Nom.	.0600	.0730	.0860	.1250	.1640	.1900
	Max.	.0600	.0730	.0860	.1250	.1640	.1900
	Min.	.0583	.0712	.0841	.1227	.1615	.1873
B Threads per Inch		80	72	64	44	36	32
A Diameter of Head	Max.	.119	.146	.172	.252	.332	.385
	Min.	.105	.130	.156	.232	.308	.359
H Height of Head	Max.	.035	.043	.051	.075	.100	.116
	Min.	.026	.033	.040	.062	.084	.098
J Width of Slot	Max.	.031	.033	.036	.043	.050	.055
	Min.	.020	.022	.024	.031	.037	.041
T Depth of Slot	Max.	.015	.019	.023	.034	.045	.053
	Min.	.010	.012	.015	.022	.029	.034

L Length	ORDNANCE PART NUMBER - C.R. STEEL-STANDARD LENGTHS					
1/8		503932	503907			
3/16		503933	503908	544234	503951	544230
1/4		503934	503939	503945	503952	503961
5/16		503935	503940	503946	503953	503962
3/8		503936	503941	503947	503954	503876
1/2			503942	503875	503955	503877
5/8				503948	503956	503963
3/4				503949	503957	503964
7/8					503958	503965
1					503959	503966

L Length	ORDNANCE PART NUMBER - C.R. STEEL-LIMITED STANDARD LENGTHS					
1/16	503925	503937				
3/32	503926	503938	503943			
1/8	503927					
5/32	503928	503906	503944			
3/16	503929			503950		
7/32						
1/4	503930					
5/16	503931					544267
7/16						
1/2					503960	503967
1-1/4					541920	
1-5/16						503968
1-1/2						

DIMENSIONS IN INCHES

MATERIAL: STEEL, CORROSION-RESISTING, GRADE 7A, SPEC. 00-S-763.

EXAMPLE FOR ORDERING: SCREW, MACHINE, C.R. STEEL, FLAT HEAD, #2-64NF-3 x 1/4", DRG. BCLX3, PART NO. 503939.

NOTE 1: ON MACHINE SCREWS 2" LONG OR SHORTER, THE COMPLETE THREADS SHALL EXTEND TO WITHIN TWO THREADS FROM THE BEARING SURFACE OF THE HEAD. LONGER LENGTHS SHALL HAVE A MINIMUM COMPLETE THREAD LENGTH OF 1-3/4".

NOTE 2: PROCURABLE FROM FRANKFORD ARSENAL. THESE SCREWS ARE PRIMARILY FOR INSTRUMENT WORK.

REVISION (6) 6-2-45

SUPERSEDES OLD TRACING BEAX4 UNDER REVISION DATE OF 3-10-44

WASHER, LOCK, "TOOTH" TYPE

BEAX4

EXTERNAL TOOTH, COUNTERSUNK

HBH APPROVED 9-11-33 DATE

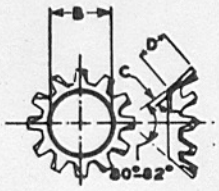

TYPE - A

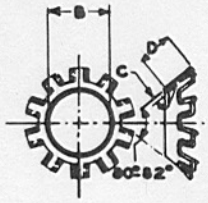

TYPE - B

Size Nominal		#4	#6	#8	#10	#12	#14 & 1/4
B Inside Diameter	Max.	.123	.150	.177	.205	.231	.267
	Min.	.113	.140	.167	.195	.220	.255
C Thickness	Max.	.019	.021	.021	.025	.025	.025
	Min.	.015	.017	.017	.020	.020	.020
D Side Length	Max.	.065	.092	.105	.099	.128	.128
	Min.	.050	.082	.088	.083	.118	.113

Material	Finish	OFFICIAL ORDNANCE PART NUMBER					
Steel	Plain	114611	114612	114613	114614	114615	114616
Steel	Cadmium or Zinc Plated	125817	138589	138593	138597	138600	138604
Steel	Nickel Plated	125819	120155	120156	120157	120158	120152
Steel	Chromium Plated	125818	138590	138594	129184	138601	138605
Steel	Phosphate Coated	125820	138591	138595	138598	138602	138606

Size Nominal		#16	5/16	3/8	7/16	1/2	
B Inside Diameter	Max.	.287	.333	.398	.463	.529	
	Min.	.273	.318	.383	.448	.512	
C Thickness	Max.	.028	.028	.034	.045	.045	
	Min.	.023	.023	.028	.037	.037	
D Side Length	Max.	.147	.192	.255	.270	.304	
	Min.	.137	.165	.242	.260	.294	

Material	Finish	OFFICIAL ORDNANCE PART NUMBER					
Steel	Plain	138608	114617	114618	114619	114620	
Steel	Cadmium or Zinc Plated	138609	134512	138617	125823	125829	
Steel	Nickel Plated	138611	120159	120160	125825	125831	
Steel	Chromium Plated	138610	138614	138618	125824	125830	
Steel	Phosphate Coated	138612	138615	138619	125826	125832	

Material:
Steel - SAE 1050 or 1066 Heat Treated, Rockwell Hardness C40-C50 or equivalent.

Dimensions in inches

Note: For specifications see Drg. BEAX10.
Example for Ordering: Washer, Lock, "Tooth" Type, Countersunk 3/8". Drg.No. BEAX4, Part No. 114618.

Note: Either Type "A" or Type "B" is acceptable.

APPROVED AS ORDNANCE STANDARD

REVISIONS ⑤ 3-10-44 ⑥ 10-3-44

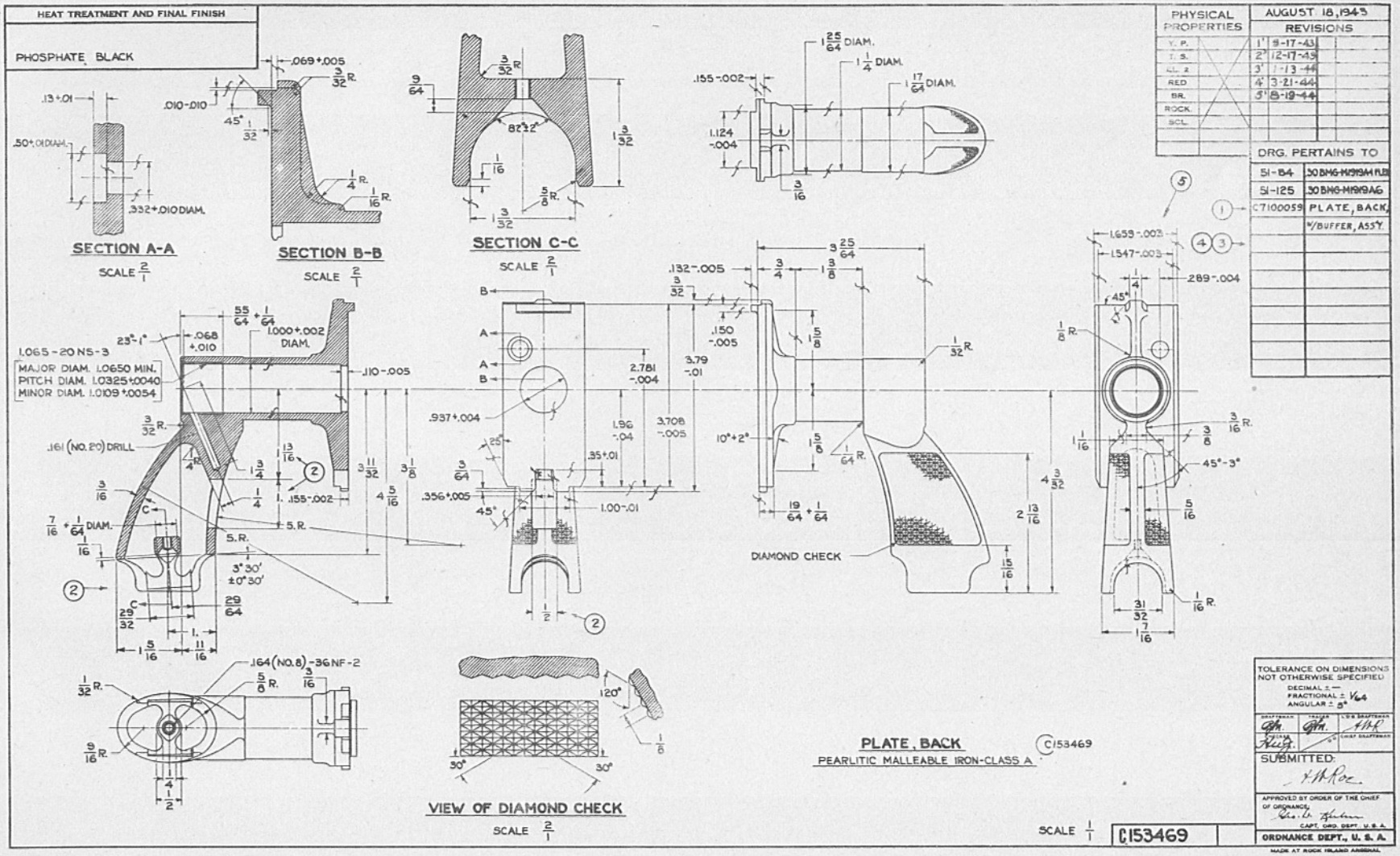
HEAT TREATMENT AND FINAL FINISH
PHOSPHATE BLACK
SECTION A-A
SCALE 2/1
SECTION B-B
SCALE 2/1
SECTION C-C
SCALE 2/1
1.065-20 NS-3
MAJOR DIAM. 1.0650 MIN.
PITCH DIAM. 1.0325+.0040
MINOR DIAM. 1.0109+.0054
.161 (NO. 20) DRILL
.164 (NO. 8)-36 NF-2
DIAMOND CHECK
VIEW OF DIAMOND CHECK
SCALE 2/1
PLATE, BACK
PEARLITIC MALLEABLE IRON-CLASS A
C153469
SCALE 1/1
C153469
PHYSICAL PROPERTIES
Y. P.
T. S.
EL. 2
RED
BR.
ROCK.
SCL.
AUGUST 18, 1943
REVISIONS
1' 9-17-43
2' 12-17-43
3' 1-13-44
4' 3-21-44
5' 8-19-44
DRG. PERTAINS TO
51-84 .30 BMG-M1919A4 FLD
51-125 .30 BMG-M1919A6
C7100059 PLATE, BACK, W/BUFFER, ASS'Y.
TOLERANCE ON DIMENSIONS NOT OTHERWISE SPECIFIED
DECIMAL ± —
FRACTIONAL ± 1/64
ANGULAR ± 5°
SUBMITTED:
APPROVED BY ORDER OF THE CHIEF OF ORDNANCE
CAPT. ORD. DEPT. U.S.A.
ORDNANCE DEPT., U. S. A.
MADE AT ROCK ISLAND ARSENAL

HEAT TREATMENT AND FINAL FINISH

PHYSICAL PROPERTIES	
Y. P.	
T. S.	
EL. 2	
RED	
BR.	
ROCK	
SCL	

SEPTEMBER 17, 1943

REVISIONS

1	11-15-43
2	12-17-43
3	1-13-44
4	3-21-44
5	9-11-45

DRG. PERTAINS TO

51-84	30BMG-M1919M1E1
51-125	30BMG-M1919A6

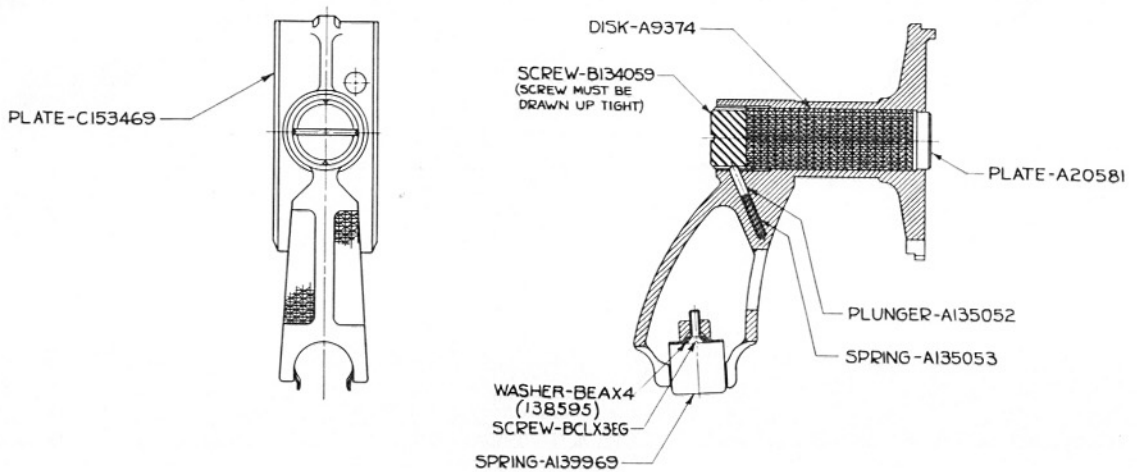

PLATE, BACK W/BUFFER, ASSEMBLY (7100059)

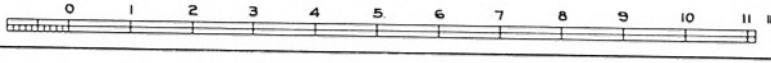

TOLERANCE ON DIMENSIONS NOT OTHERWISE SPECIFIED
DECIMAL ± —
FRACTIONAL ± —
ANGULAR ± —

SUBMITTED:

APPROVED BY ORDER OF THE CHIEF OF ORDNANCE

CAPT, ORD DEPT, U. S. A.

ORDNANCE DEPT., U. S. A.

MADE AT ROCK ISLAND ARSENAL

C 7100059